DoorBird
Technology meets Design.

D2101V surface mounting housing (backbox)

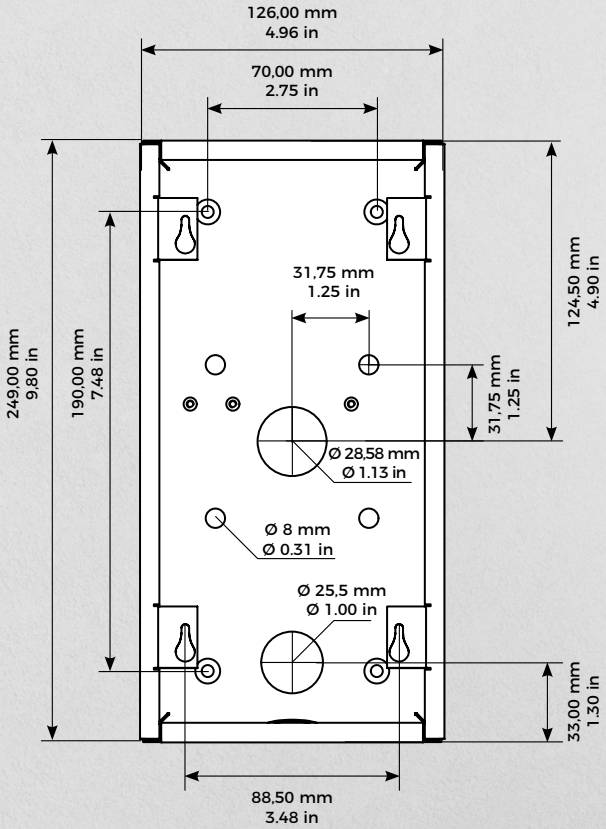

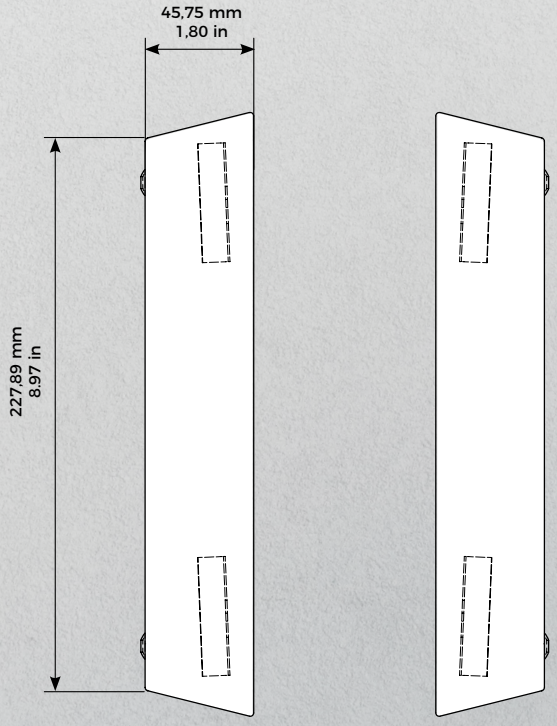

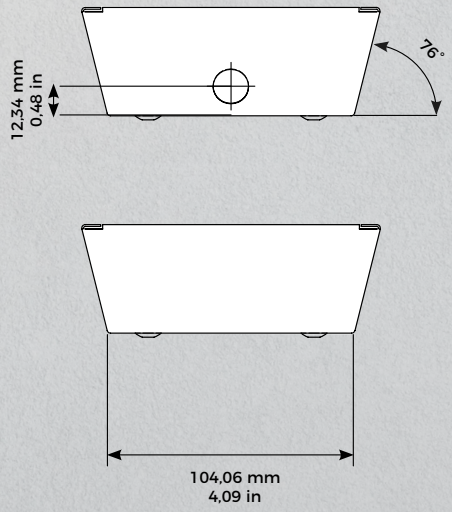

Errors and omissions excepted. | Last update 08/2020 - Copyright © 2020 Bird Home Automation GmbH – www.doorbird.com